Product: Die grinder Art. No. 702513

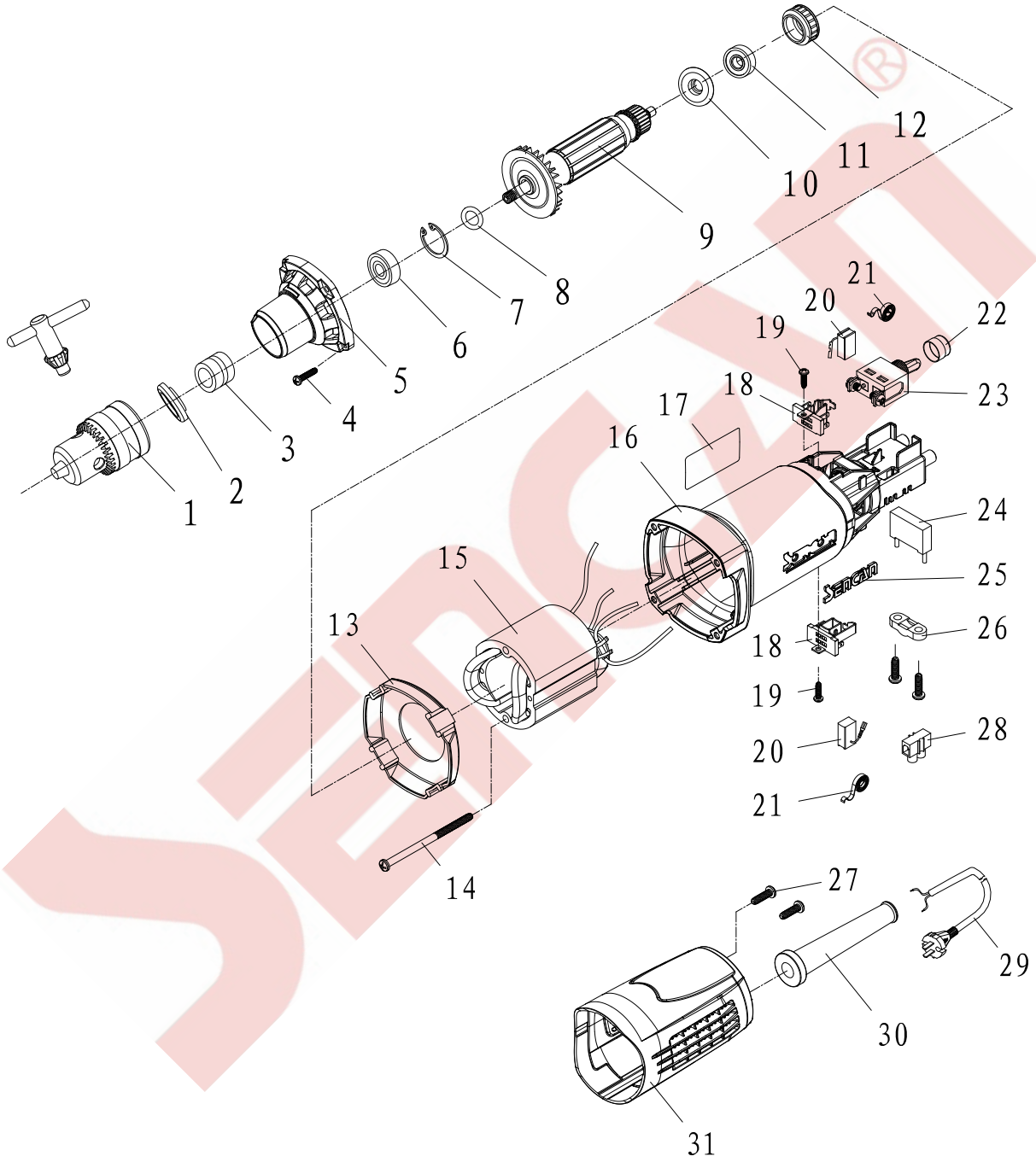

Version No.	D	Enable Time	2022.8

SENCAN®

Product:Die grinder Art.No.702513

No.	Part Name(Chinese)	Part Name(English)	Code	Qty	No.	Part Name(Chinese)	Part Name(English)	Code	Qty
1	钻夹头3/8″-24UNF	Chuck 3/8″-24UNF	10304001024	1					
2	防尘盖	Dust-Proof Cover	10401002047	1					
3	隔套	Spacer	10306002004	1					
4	自攻螺钉ST4×16	Screw ST4×16	30202022	4					
5	头壳	Bearing Housing	10201004230	1					
6	轴承6000	Bearing 6000	30103142	1					
7	孔用弹性挡圈26	Circlip for hole	30302016	1					
8	平垫片16×10.2×0.3	Washer 16×10.2×0.3	30403019	1					
9	转子	Armature	10502001229	1					
10	爬电挡圈	Insulation Washer	10101006004	1					
11	轴承607-2RS	Bearing 607-2RS	30103039	1					
12	轴承衬套	Bearing Bush	10102002009	1					
13	挡风圈	Air Deflector	10101005044	1					
14	自攻螺钉ST4×65	Screw ST4×65	30202050	2					
15	定子	Stator	10501001212	1					
16	机壳	Housing	10101001147	1					
17	铭牌	Name Plate	20302008329	1					
18	刷架6×9	Brush Holder	10606001083	2					
19	自攻螺钉ST3×8	Screw ST3×8	30202009	2					
20	碳刷6×9	Carbon brush 6×9	10605001061	2					
21	盘簧	Spring	10303002004	2					
22	开关橡胶帽	Rubber Switch Cap	10102004038	1					
23	开关	Switch	10601001098	1					
24	电容	Capacitor	10603001005	1					
25	商标	Trademark	20401001039	1					
26	电缆压板	Cord Anchor	10101011123	1					
27	自攻螺钉ST4×14	Screw ST4×14	30202019	2					
28	塑料接线排3	Connection Rod	30802008	1					
29	电源线2×0.75	Cord 2×0.75	10602006018	1					
30	电缆护套	Cord Sleeve	10102001013	1					
31	后罩	Back Cover	10101003044	1					

Version No.	D	Enable Time	2022.8