SENCAN®

Product: Cordless Drill Art. No. D511406

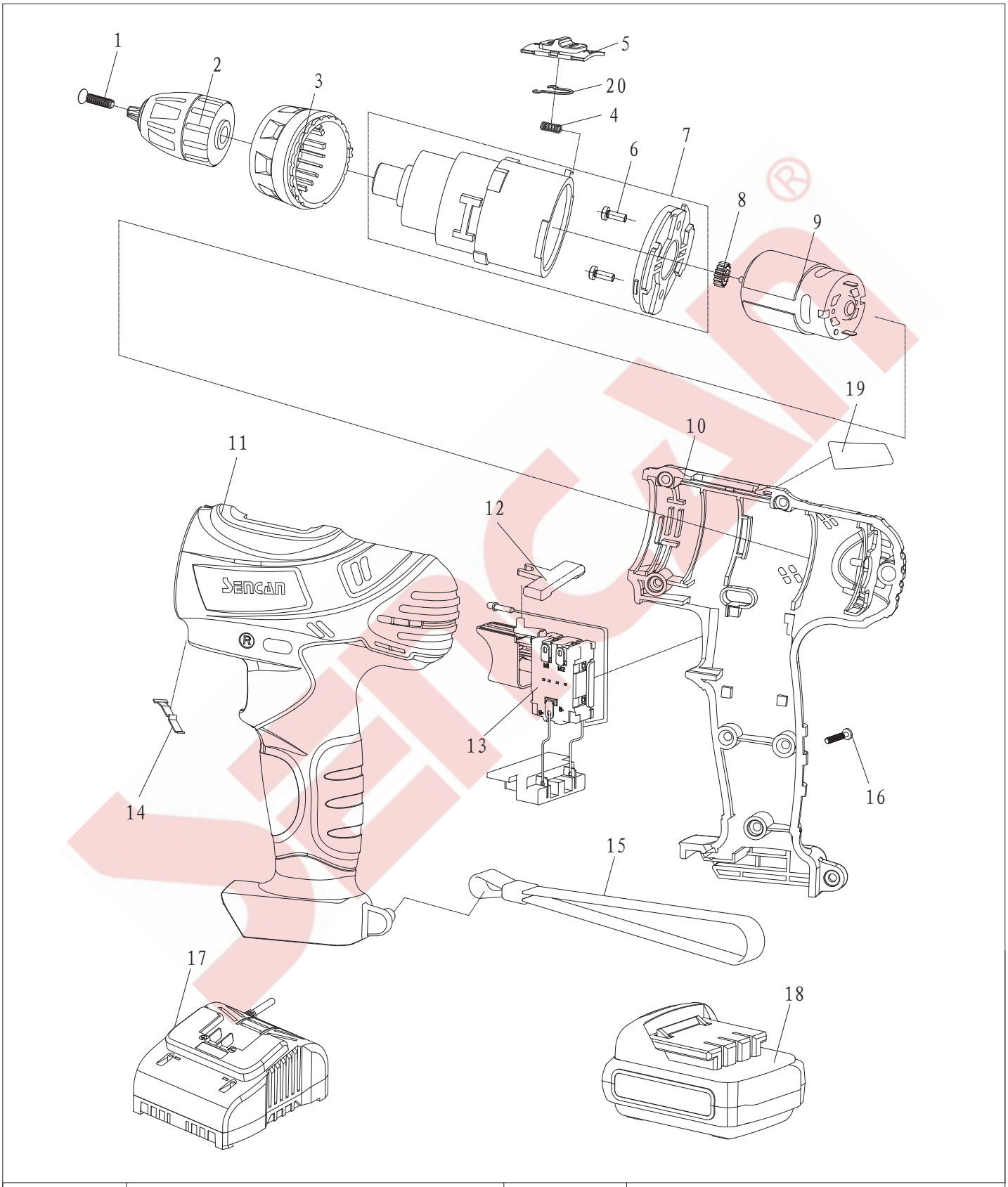

Version No.	D	Enable Time	2022.8

Product:Cordless Drill Art.No.D511406

No.	Part Name(Chinese)	Part Name(English)	Code	Qty	No.	Part Name(Chinese)	Part Name(English)	Code	Qty
1	螺钉M5×20-LH	Screw M5×20-LH	30201073	1					
2	钻夹头3/8″-24UNF	Chuck 3/8″-24UNF	10304001063	1					
3	扭力杯	Torque Adjusting Ring	10101011238	1					
4	档位弹簧	Gear Push Spring	10303001135	1					
5	档位推钮	Gear Push Button	10101007194	1					
6	带平弹垫螺钉M3×6	Screw M3×6	30201163	2					
7	变速箱组件	Gear Box Complete	10701015052	1					
8	电机齿轮	Motor Gear	10302004167	1					
9	电机	Motor	10608002006	1					
10	右机壳	Left Housing	10101002138	1					
11	左机壳	Right Housing	10101002137	1					
12	换向推杆	Reversing Push Rod	10101007140	1					
13	开关组件	Switch Assembly	10608002011	1					
14	T型弹片	T-Shrapnel	10401003046	1					
15	挂绳	Sling	212010053	1					
16	自攻螺钉ST3×14	Screw ST3×14	30202097	8					
17	CD1415充电器	Charger	56102005	1					
18	LD1415A电池包	Bettery	56101104	2					
19	铭牌	Name Plate	20302001793	1					
20	档位推钮卡簧	Gear Push Circlip	30303037	1					

Version No.	D	Enable Time	2022.8